GWM
GO WITH MORE

More Can Do

Cannon Alpha

GO WITH MORE

More Can Do.

Contents

Introduction	Page 2
Design	Page 8
Performance	Page 14
Technology	Page 18
Plug-in Hybrid	Page 22
Safety	Page 26
GWM Care	Page 30
Colour	Page 32
Dimensions	Page 34
Specifications	Page 36

Say hello to GWM.

GWM is a world-renowned vehicle manufacturer capable of designing and producing SUVs, utes and powertrains simultaneously. At GWM, everything we do is grounded in our corporate philosophy: ‘improving little by little every day.’

From building world-class research and development systems, which enable continuous innovation, to following the ‘excessive investment’ principle, which drives industry leadership, we relentlessly put our philosophy into practice. We are proud to make vehicles that combine the best components, technology and safety features from around the world. With over 2.5 million ute and pick up’s sold globally (and counting), we are a proud maker of durable utilitarian vehicles for over 25 years.
We attribute our success to passion, drive and a commitment to listening to our customers.

Designed to meet all your needs.

Introducing a new breed of ute, unlike anything you've seen, sat in or driven before - the GWM Cannon Alpha. Larger overall dimensions mean a bigger on road presence and better in-cabin comfort. Improved on and off road performance opens more possibilities than you ever imagined. Put your foot down and feel the smile spread across your face as you instantly sense the wave of torque pinning you to your seat. Now you can tow, haul, drag, pull, push or lug almost anything, effortlessly.

*overseas model shown

Larger, smarter, and gutsier than ever.

With incredible on road performance and unbelievable off road possibilities, the Cannon Alpha is the most powerful Diesel powertrain ute we have ever built

*Model shown is a Cannon Alpha

Grand doesn't do the Cannon Alpha justice. This vehicle is about as lavish and well-appointed as a ute can get with a host of opulent interior specifications combined with a collection of striking exterior design features. These include an overhauled centre console with two new larger tablet-style screens surrounded by attractive new woodgrain style trim with a new colour, design and texture. The new three spoke faux leather accented steering wheel and soft, supple front and rear seats are our most comfortable yet. Squarer LED headlights create a sense of exterior style and sophistication. And the 60/40 split-swinging tailgate* adds a touch of design class providing easier access to the tray.

*Ultra and above variants only.

Our most stylish and luxurious ute ever.

LED tail lights^

19" Black wheels fitted with premium Continental Tyres*^

**Vanta variant only.*

^Model shown is a Cannon Alpha

60/40 split tailgate*

**Ultra and above variants only.*

Wireless charging port*^

**Ultra variants only*

Front passenger VIP switch*

**Ultra variants only*

Premium appointed cabin^

**Model shown is a Cannon Alpha Ultra PHEV.*

^Model shown is a Cannon Alpha

A new breed of performance.

With a choice of a powerful 3.0-litre turbo diesel or advanced Hi4-T plug-in hybrid powertrain, the Cannon Alpha is built for those with a Can Do attitude. Delivering impressive performance, power, torque and a 3.5-tonne braked towing capacity, it has the strength and capability to take on more.

From demanding worksites to weekend adventures, the Cannon Alpha combines power, versatility and confidence to handle whatever comes your way. Whether you're towing the boat, hauling the caravan or exploring beyond the bitumen, it's built to help you Can Do More.

With advanced 4WD capability, intelligent drive technology and features designed for challenging conditions, the Cannon Alpha gives you the confidence to tackle tough terrain and keep moving when the going gets tough.

**Model shown is a Cannon Alpha*

More Can Do, with a 3.0L turbo diesel or turbo petrol hybrid engine.

*Model shown is a Cannon Alpha

Smart tech never looked smarter

State of the art is now a work of art thanks to the new styled 14.6-inch touchscreen panel, featuring GWM's intuitive COFFEE OS* user interface. Designed to put everything you need at your fingertips, COFFEE OS lets you control your infotainment from one screen, while the other displays your vehicle's gauges, alerts, digital instruments, and safety systems.
You can even see a 360° view of the vehicle while driving. Plus, a wireless charging dock*, keyless entry and push-button start create a smarter, more connected and effortless overall driving experience.

*COFFEE OS is available on diesel models only.

More effortless power through tech.

Hi4T

Meet our most tech-advanced ute, the GWM Cannon Alpha Hi4T Plug-in Hybrid - pumping 300kW of power and 750Nm of torque from a 2.0-litre four-cylinder petrol engine is a marvel in engineering. Built to purpose, it retains industry standard of 3.5 tonne towing capacity, true mechanical 4x4 capability, 1,060km combined range, finally class-leading pure electric and total combined range. The GWM Cannon Alpha PHEV is a ute of tomorrow on road today.

Hi4-T Technology

GWM's Hi4-T (Hybrid Intelligent 4WD Technology) sits at the heart of our electrification roadmap. This advanced multi-mode petrol-electric hybrid system integrates a powerful turbocharged engine with a high-capacity lithium-ion battery, delivering outstanding efficiency, performance, and refinement. Designed for both city streets and rugged terrain, Hi4-T provides smooth, responsive take-offs, strong acceleration, and exceptional fuel savings - while ensuring minimal noise and maximum driving confidence.

Built for Australia.

New standard brake controller and Towing Mode

*overseas model shown

*Model shown is a Cannon Alpha

Built to the safest standards.

ANCAP SAFETY
TESTED 2024 ★★★★★

ANCAP Safety test

ANCAP Safety test

Equipped with more than 100 of the latest active and passive safety features, the Cannon Alpha is engineered to deliver confidence and peace of mind on every journey. The GWM Cannon Alpha PHEV has been awarded the highest possible 5-star ANCAP safety rating, highlighting GWM's commitment to advanced safety technology.

Standard safety features across the Cannon Alpha range include Automatic Emergency Braking, Lane Keep Assist, a Driver Fatigue Monitoring System and Traffic Sign Recognition, helping provide reassurance that your GWM vehicle is designed to look out for you and those around you.

Protection from all angles.

Smart tech, active and passive safety features and front and side monitoring mean worry-free driving.

GWM Care

Every GWM comes with GWM Care. It begins from the moment you take delivery of your vehicle and continues long into the future. Wherever the road leads, you can rest assured knowing that your GWM will be kept at its best for many years to come.

8 Year Unlimited KM Battery Pack Warranty*

7 Year Unlimited KM Warranty*

7 Year Roadside Assist

7 Year Capped Price Servicing

*Terms and conditions apply

Colour

GWM vehicles are available in a range of stunning contemporary colours.

Premium Colour (+$595)

Premium Colour (+$595)

Premium Colour (+$595)

❶ Length: 5445mm
❷ Height: 1924mm
❸ Wheelbase: 3350mm
❹ Width: 1991mm

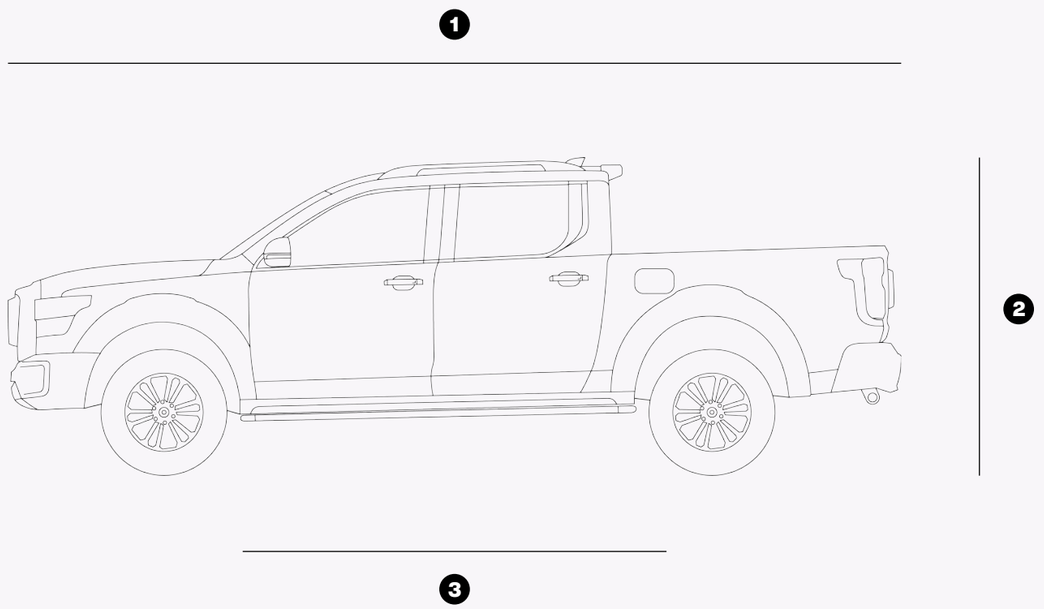

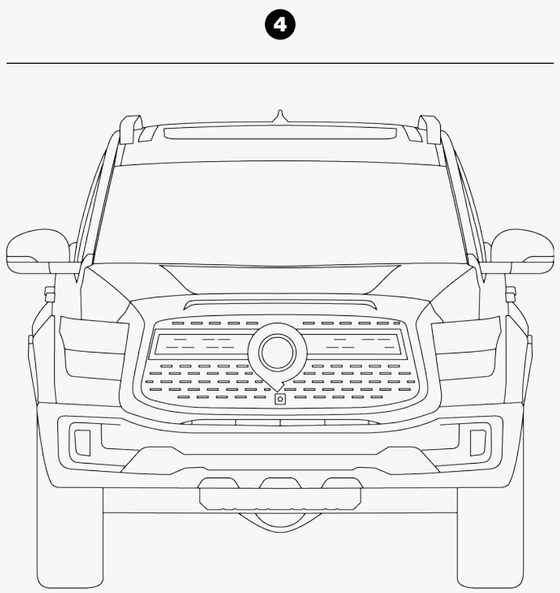

Dimensions

		Lux - 3.0 Turbo Diesel	Vanta - 3.0L Turbo Diesel	Lux - PHEV	Ultra - PHEV
Dimensions	Length/Width/Height (mm)[1]	5445×1991×1924	5445×1991×1924	5445×1991×1924	5445×1991×1924
	Wheelbase (mm)	3350	3350	3350	3350
	Min ground clearance (mm)[1]	222	222	210	210
	Approach/Break over/ Departure angle°[1]	28.5°/19°/23°	28.5°/19°/23°	28.5°/19°/23°	28.5°/19°/23°
	Wading depth (mm)	800	800	800	800
	Turning circle – kerb to kerb (m)	13.0m	13.0m	13.0m	13.0m
Engine	3.0L Turbo diesel	●	●	-	-
	2.0L Turbo petrol hybrid	-	-	●	●
	Displacement (cm^3)	2994	2994	1998	1998
	Max power (kW@rpm)	170kw	170kw	Electric motor 120 kW; Petrol engine 180 kW; Combined 300 kW;	Electric motor 120 kW; Petrol engine 180 kW; Combined 300 kW;
	Max torque (Nm@rpm)	620@1400-2400	620@1400-2400	Electric motor 400 Nm; Petrol engine 380 Nm; Combined 750 Nm;	Electric motor 400 Nm; Petrol engine 380 Nm; Combined 750 Nm;
	Compression ratio	16:1	16:1	11:1	11:1
	Fuel economy (L/100km) combined[2]	7.3	7.3	1.7	1.7
	Fuel economy (L/100km) Urban[2]	8.2	8.2	-	-
	Fuel economy (L/100km) Extra urban[2]	6.8	6.8	-	-
	Co2 emissions (g/km)[2]	192	192	39	39
	Recommended fuel octane rating	Diesel	Diesel	Petrol 91	Petrol 91
	Emission standard	Euro 5	Euro 5	Euro 5	Euro 5
	NEDC EV range (km)	-	-	115	115
	NEDC Combined range (km)	-	-	1060	1060
	Low charge fuel economy (L/100km) combined[2]	-	-	7.9	7.9
	Battery Type	-	-	Ternary Lithium	Ternary Lithium
	Battery capacity (kWh)	-	-	37.11	37.11
	50kW DC charging (hour)	-	-	0.4 (30-80%)	0.4 (30-80%)
	AC charging (hour)	-	-	6.5	6.5
	V2L Capability		-	6kW	6kW
	Charge connection type	-	-	CCS2	CCS2
	Battery pre-heating	-	-	●	●

Specifications

		Lux - 3.0 Turbo Diesel	Vanta - 3.0L Turbo Diesel	Lux - PHEV	Ultra - PHEV
Transmission	9-Speed Automatic Transmission (9AT)	●	●	-	-
	9-Speed Hybrid Automatic Transmission (9HAT)	-	-	●	●
	Driveline	Partime 4WD		Torque on Demand (TOD) 4WD	
	Electronic Gear Shift	●	●	●	●
	Gear Ratios	1st 5.288, 2nd 3.243, 3rd 2.252, 4th 1.636, 5th 1.211, 6th 1.000, 7th 0.867, 8th 0.717, 9th 0.598, reverse 4.648			
Weights and Capacities	Braked towing capacity (kg)[3]	3500	3500	3500	3500
	Unbraked towing capacity (kg)[3]	750	750	750	750
	Maximum downball weight (kg)	350	350	350	350
	Maximum payload (kg)	945	945	685	685
	Kerb weight (kg)[1]	2550	2550	2810	2810
	Tare weight (kg)[1]	2458	2458	2761	2761
	Max front axle load (kg)	1680	1680	1680	1680
	Max rear axle load (kg)	2026	2026	2250	2250
	Gross Vehicle Mass (kg)[1]	3495	3495	3495	3495
	(GCM) (kg)[1]	6555	6555	6745	6745
	Seating capacity	5	5	5	5
	Fuel tank capacity (L)	78	78	75	75
Chassis and Steering	Front Suspension	Coil spring double wishbone			
	Rear Suspension	Leaf spring live axle		Multi-link coil spring live axle	
	Brakes	Front & rear: vented disc brakes			
	Intelligent Start-Stop (ISS)	●	●	-	-
	Auto Hold	●	●	●	●
	Paddles Shifter	●	●	●	●
	4WD:Dual Speed+Mechanical Lock	●	●	-	●
	Rear Differential Lock (Electric)	●	●	●	●
	Front Differential Lock (Electric)	-	●	-	●
	Electronic park brake	●	●	●	●
	Trailer Sway Mitigation	●	●	●	●
	Driving Mode: Standard, Sport, Eco, 4H, 4L	-	-	●	●
	Driving Mode: 2H, 4H Sport, Snow, Mud, Sand Eco	●	●	-	-
	Towing Driving Mode	●	●	●	●

		Lux - 3.0 Turbo Diesel	Vanta - 3.0L Turbo Diesel	Lux - PHEV	Ultra - PHEV
Exterior	Tray tie down points x4	●	●	-	●
	Tray spray on liner	●	●	-	●
	Alloy wheels	Two tone machined 18"	Black 19"	Black 18"	
	Tyre size	265/60 R18	265/55 R19 109H	265/60 R18	
	Full size spare	Steel	Alloy	Steel	
	Type Pressure Monitor System (TPMS)	●	●	●	●
	Mirrors: Manual Fold + Electric Adjustment + Indicator	●	-	●	-
	Mirrors: Auto Fold + Electric Adjustment + Indicator	-	●	-	-
	Mirrors: Memory + Auto Fold + Electric Adjustment + Indicator	-	-	-	●
	Front grille	Chrome	Black		
	Roof rails	●	Black		
	Door handles	Body colour	Black		
	Side step - fixed	Silver	Black		
	Shark fin antenna	●	●	Black	
	Built in trailer socket	●	●	●	●
	C pillar storage	●	●	●	●
	Tailgate electronic lock	●	●	●	●
	Tailgate - one piece	●	-	●	-
	Split tailgate (60:40)	-	●	-	●
	Red brake calipers	-	-	●	●
	220V Power Outlet in the TUB	●	●	●	●
	Rear privacy glass	●	●	●	●
	Rear electric sliding window	-	●	-	●
	Rear Windshield Defrosting	●	-	●	-
	Four door window auto up/down + anti pinch	●	●	●	●
	Soundproof Glass (Rear Door + Front Windshield)	●	●	●	●
	Soundproof Glass (Rear Windshield)	●	-	●	-
	Panoramic Sunroof	-	●	-	●
	Window Short Lift/Drop	●	●	●	●
	Sunvisor with vanity mirror	●	-	●	-
	Sunvisor with illuminated vanity mirror	-	●	-	●
	Automatic windscreen wipers	●	●	●	●
	Manual-dimming rear view mirror	●	-	●	-
	Auto-dimming rear view mirror	-	●	-	●
	N95 Dust Filter	●	●	●	●
	Electric Power Steering (EPS)	●	●	●	●
	Manual adjustable steering wheel (tilt and reach)	●	●	●	●
	Faux leather steering wheel	●	●	●	●
	Heated steering wheel	-	-	-	●
	Multifunction steering wheel	●	●	●	●
	Steering Model (Light, Comfort, Sport)	●	●	●	●

		Lux - 3.0 Turbo Diesel	Vanta - 3.0L Turbo Diesel	Lux - PHEV	Ultra - PHEV
Lights	Headlight levelling - manual	●	●	●	●
	LED headlights	●	●	●	●
	Auto headlight	●	●	●	●
	Auto highbeam	●	●	●	●
	Follow me home function	●	●	●	●
	Daytime Running Light (DRL)	●	●	●	●
	LED taillights	●	●	●	●
	Taillight finish - Smoked	●	●	-	●
	LED front fog lights (steering)	-	●	-	●
	Rear fog light	●	●	●	●
	LED-High-Mounted Stop lamp	●	●	●	●
	LED Tray light	●	●	●	●
	64 Color ambient light	-	-	-	●
	Front Room Lamps(With Soft Light Lamp)	●	●	-	●
	Side roof lamps	-	●	-	●
	Rear room lamps	●	-	-	-
	Glove box light	-	●	-	●
	Sunglasses holder	●	●	●	●
Interior	Leatherette seats	●	-	●	-
	Leather accented seats	-	●		●
	Driver Seat: 6-Way Electric Adjustment	●	-	●	-
	Driver Seat: 8-Way Electric Adjustment+ Lumbar support + Memory + Welcome Function	-	●		●
	Front Passenger Seat: 4-Way Electric Adjustment	-	-	●	-
	Front Passenger Seat: 6-Way Electric Adjustment	●	●	-	●
	Front Passenger Seat: Vip Switch Control	-	●	-	●
	Front Seats: Heating	-	●	-	-
	Front + Rear Outer Seats: Heating	-	-	-	●
	Front Seats: Cooling + 8 Bladder Massage	-	●	-	●
	Rear Outer Seats: Cooling	-	-	-	●
	Rear Outer Seats: Manual 2-way Adjustment	●	●	●	-
	Rear Outer Seats: Electric 2-way Adjustment	-	-	-	●
	Adjustable Headrest (2-Direction)	●	●	-	●
	Middle headrest second row	●	●	-	●
	Rear Seats: Welcome Function	-	-	-	●
	Rear seat back: 40:20:40	●	●	●	●
	Rear center armrest with cup holder	●	●	●	●
	Cupholder+Storage Box (no flocking)	●	●	-	●

		Lux - 3.0 Turbo Diesel	Vanta - 3.0L Turbo Diesel	Lux - PHEV	Ultra - PHEV
Safety	7 Air Bags: Dual SRS Airbags + Dual Front Side Airbags + Dual Curtain Airbags + Centre Airbag	●	●	●	●
	Front Seat Belt: Pre-tensioners With Load Limiters + CLT	●	●	●	●
	Rear Seatbelt Pre-tensioners With Load Limiters (outer seats)	●	●	●	●
	ISOFIX x2	●	●	●	●
	Top Tether x2	●	●	●	●
	Child Presence Detection	●	●	●	●
	Seat Belt Warning-All seats	●	●	●	●
	Event Data Recorder (EDR)	●	●	●	●
	Driver Airbag Cover-Leather Coating	●	●	●	●
	Door Perssure Sensor	●	●	●	●
	Brake Override System (BOS)	●	●	●	●
	Factory Fitted Trailer Brake Controller	●	●	-	-
	Remote Central Lock & Automatic Locking Function	●	●	●	●
	Collision Automatic Unlock Function & Fuel Cut Function	●	●	●	●
	MANUAL Rear door child lock	●	●	●	●
	AUTO DOOR LOCK (speed>=15km/h)	●	●	-	●
Intelligent Technologies	Active Cruise Control (ACC) + Cruise Control (CC) + Traffic Jam Assist (TJA)	●	●	●	●
	Launch Control	-	-	●	●
	Intelligent Cornering Asset (ICA)	●	●	●	●
	Hill-start Assist Control (HAC)	●	●	●	●
	Hill Descent Control (HDC)	●	●	●	●
	Brake Assist System (BAS)	●	●	●	●
	Vehicle Dynamic Control Systems[6]	●	●	●	●
	Dynamic Steering Torque	●	●	●	●
	Rear Cross Traffic Alert (RCTA)	●	●	●	●
	Rear Cross Traffic Brake (RCTB)	●	●	●	●
	Lane Change Assist (LCA)	●	●	●	●
	AEB Junction Assist	●	●	●	●
	Combine AEB Switch	●	●	●	●
	Door Opening Warning (DOW)	●	●	●	●
	Auto Emergency Brake (AEB) Pedestrian + Cyclist	●	●	●	●
	Forward Collision Warning (FCW)	●	●	●	●
	Lane Safety Systems[7]	●	●	●	●
	Emergency Break Signal System (ESS)	●	●	●	●
	Front Cross Traffic Alert (FCTA) Front Cross Traffic Brake (FCTB)	●	●	●	●
	Rear Collision Warning (RCW)	●	●	●	●
	Traffic Sign Recognition (TSR)	●	●	●	●

		Lux - 3.0 Turbo Diesel	Vanta - 3.0L Turbo Diesel	Lux - PHEV	Ultra - PHEV
Intelligent Technologies (Continued)	Driver Fatigue Monitor System (DFMS)	●	●	●	●
	Push Button Start	●	●	●	●
	Bluetooth	●	●	●	●
	Auto Parking Assist	-	-	-	●
	Auto Reversing Assist	-	-	-	●
	360° View Monitor	●	●	●	●
	Front Parking Sensors	4	4	4	6
	Rear Parking Sensors	4	4	4	6
	Clear Chassis View	●	●	●	●
	Two Smart Keys+Two Machine Keys	●	●	●	●
	Keyless Entry (Front)	●	●	●	●
	Head Up Display (HUD)	-	●	-	●
Air Conditioning	Dual zone climate control	●	●	●	●
	Rear A/C Outlet-Top/Under	●	●	●	●
	Cockpit Cleaning System	●	●	●	●
	A/C Comfortable Mode Optional	●	●	●	●
	Ouside Temperature Display	●	●	●	●
Multimedia	Front & rear row USB outlet	●	●	●	●
	AV+MP5+Wi-Fi	●	●	●	●
	6 Speakers	●	●	●	-
	10 Speakers - Infinity	-	-	-	●
	Independent Amplifier - Infinity	-	-	-	●
	Speed Sensing Volume	●	●	●	●
	Built in dash cam USB port	●	●	●	●
	Wireless Charging - Front (50w)	-	●	-	-
	Wireless Charging (Front + Back)	-	-	-	●
	Electronic Clock	-	-	-	●
	Connected Car - Telematics	●	●	●	●
	Voice Recognition	●	●	●	●
	A/C Voice Control	●	●	●	●
	Cell Phone Connector	●	●	●	●
	12.3" digital cluster + brightness adjust	●	●	●	●
	14.6" Color Multitouch Screen	●	●	●	●
	Wireless Apple CarPlay(R)5 & Android Auto™4	●	●	●	●

*overseas model shown

1 Weights/mass/volumes/dimensions are approximate and subject to individual vehicle variances, and should be confirmed before fitting any accessories, towing or otherwise relying on this value

2 Results achieved in ADR81/02 fuel consumption testing. Results produced in laboratory test conditions, using sample vehicles without fitment of accessories/customisation, and do not reflect real world driving. Figures should only be used for comparative purposes.

3 Towing capacity subject to regulatory requirements, tow bar and vehicle design and towing equipment limitations.

4 Android Auto™ is a trademark of Google LLC. Requires compatible device, USB connection, mobile data, network reception and GPS signal. Mobile usage at user's cost. Functionality subject to change.

5 CarPlay® is a trademark of Apple Inc in the U.S. and other countries. Requires compatible device, USB connection, mobile data, network reception and GPS signal. Mobile usage at user's cost. Functionality subject to change.

6 Vehicle dynamic control system includes Anti lock Brake System (ABS), Electronic Brake pressure Distribution (EBD), Traction Control System (TCS), Roll-over Mitigation Intervention (RMI), Electronic Stability Control (ESC)

7 Lane safety system includes Lane Departure Warning (LDW), Lane Keep Assist (LKA), Lane Center Keeping (LCK), Emergency Lane Keep (ELK), Lane Change Assist (LCA)

GWM
GO WITH MORE

For more information visit gwmanz.com/au

GWM Australia reserves the right to alter vehicle specifications and equipment levels without notice. Some equipment featured on vehicles in this brochure may not be available or may be optional. To the extent permitted by law, GWM Australia shall not be liable to any person as a result of reliance on the content of the brochure. Always check with your local GWM Dealer for the latest product specifications.

Information in this brochure is current as at 14/10/2026.
Edition Code: GWMAU 20261014
Copyright © GWMAU. All rights reserved.