GWM
GO WITH MORE

More Can Do

GWM Cannon

GWM Cannon.
More Can Do.

Contents

Introduction	Page 2
Design	Page 6
Performance	Page 10
Technology	Page 16
Safety	Page 18
Accessories	Page 26
GWM Care	Page 30
Colour	Page 32
Dimensions	Page 34
Specifications	Page 36

Say hello to GWM.

GWM is a world-renowned vehicle manufacturer capable of designing and producing SUVs, utes and powertrains simultaneously. At GWM, everything we do is grounded in our corporate philosophy: 'improving little by little every day.'

From building world-class research and development systems, which enable continuous innovation, to following the 'excessive investment' principle, which drives industry leadership, we relentlessly put our philosophy into practice. We are proud to make vehicles that combine the best components, technology and safety features from around the world. With over 2.5 million ute and pick up's sold globally (and counting), we are a proud maker of durable utilitarian vehicles for over 25 years.
We attribute our success to passion, drive and a commitment to listening to our customers.

Tough never looked so good.

Tick off the to-do list in the GWM Cannon, with more style inside and more power out.

Don't be fooled by its rugged exterior, the GWM Cannon is a smooth and sophisticated driving experience. Locally-tuned, independent front suspension, paired with heavy duty rear leaf suspension creates outstanding load-carrying in any terrain.

Discover the thrill of driving in the refined, European designed cabin, with plenty of legroom and all the features you need. Depending on the model, the driver and passengers can also feel the benefit of heated power-adjustable seats*, a clever 360 degree camera* and a 10.25 inch digital instrument cluster^.

*Model shown is a Cannon PHEV

*Model shown is a Cannon PHEV

Rugged on the outside. Luxurious inside.

*Ultra and above variants only

^Only available on Cannon PHEV variants

Integrated tailgate step ladder+

*3.5 tonne towing^*

60/40 split folding seats

^2.4L & PHEV Variants only
+2.4L Turbo Diesel variant only

There's no task too tough for Hi4-T power.

Built for those with a Can Do attitude, the Cannon Plug-in Hybrid combines an advanced 2.0-litre turbocharged petrol engine with GWM's innovative Hi4-T plug-in hybrid system to deliver an outstanding 310kW of combined power and 750Nm of combined torque. From the worksite to the weekend and everywhere in between, it has the strength, confidence and versatility to take on whatever comes next.

With instant electric torque, effortless acceleration and intelligent hybrid performance, the Cannon Plug-in Hybrid is ready to tow, carry and conquer with ease. Whether you're hauling a trailer, loading up for the job or escaping off the beaten track, it delivers powerful performance without compromising refinement or efficiency.

When the road ends, the Can Do spirit continues. An advanced intelligent 4WD system, complete with 4WD Low Range, a rear differential lock* and selectable drive modes, gives you the confidence to tackle challenging terrain. Paired with the instant response of its electric motors, the Cannon Plug-in Hybrid delivers exceptional traction, control and capability—so you can take on more, go further and do it all with confidence.

Whatever the challenge. Wherever the destination. The Cannon Plug-in Hybrid is built to help you Can Do more.

*Plug-in Hybrid and 2.4L Diesel variants only

Choose between the 2.4L Turbo Diesel* or the advanced 2.0-litre turbocharged petrol with GWM's Hi4-T PHEV, delivering 310kW and 750Nm.

*Only available on Lux Diesel variant or above.

GWM
PHEV
Hi4T
CANNON PHEV

*Model shown is a Cannon PHEV

More tech? Yep, can do.

Staying connected has never been easier with Apple CarPlay® and Android Auto™ standard across the GWM Cannon range and displayed on a crystal clear 12.3 inch colour touchscreen for infotainment on demand.

There's also the added benefit of Wireless Charging, a dedicated Dash Cam USB Port*, Keyless Entry and Push button Start. The GWM Cannon truly is one of the most advanced and convenient utes available today.

*Ultra grade and above

Born tough.
Built smart.

ANCAP SAFETY
TESTED 2021 ★★★★★

ANCAP Safety test

The GWM Cannon was born to tackle the toughest jobs but it was also built smart with a full suite of comprehensive safety systems designed to protect occupants and other road users.

Having achieved the highest possible 5 star safety rating by ANCAP in 2021*, the GWM Cannon comes with a number of advanced safety features including Autonomous Emergency Braking (AEB), Lane Keep Assist and Adaptive Cruise Control. Whether at work or play, you can be sure that GWM is looking out for you.

*Cannon XSR & Plug-in Hybrid variants not ANCAP rated.

Protection from all angles.

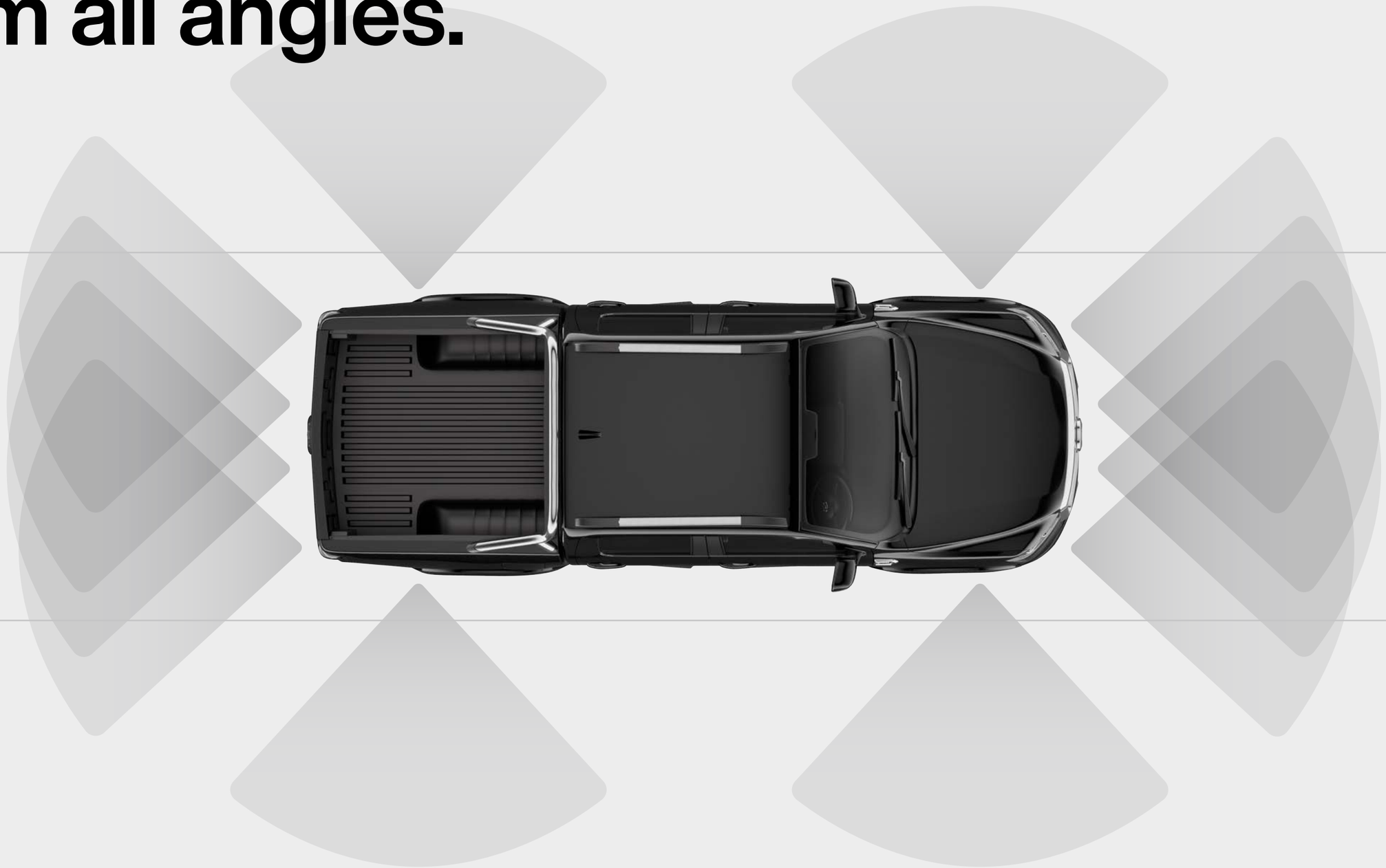

Smart tech, active and passive safety features and front and side monitoring mean worry-free travel.

The Cannon-XSR is made for roads less travelled.

Built, bred and designed like no other, the XSR is a true 4x4 that completely changes the off-road game for good. With a rugged exterior including full underbody protection, snorkel, as well as front and rear steel bumpers, it'll go anywhere you point it. Plus, with a powerful turbo diesel engine, smart off-road tech, and an impressive collection of active and passive safety features, it will get you home comfortably from wherever it was you were.

*Model shown is a Cannon XSR

Job's done in this one.

GWM's tough Cannon Cab Chassis is built to get the job done, with up to 1,150kg of payload*. The durable, versatile aluminium tray features a flat surface, making it ideal for carrying pallets, bulky items and everything in between.

With a rated towing capacity between 3 to 3.5 tonnes^, the Cannon CC is ready to take on the big jobs.

*Single cab only. Up to 995kg payload on the Dual cab.

^Only available on the Cannon Lux Dual Cab.

GWM Genuine Accessories. For the road ahead.

Visit gwmanz.com/models/ute/cannon/accessories

See your GWM Dealer to confirm Genuine Accessories are suitable for your vehicle prior to ordering, as specifications, applicability, availability and fitment requirements may change over time. Consider combined mass of load and accessories to ensure gross vehicle mass limits are not exceeded. Fitment of certain accessories may require recalibration, relocation or removal of standard equipment (which may be retained by GWM Dealer). The displayed image serves as a representation of the actual part and may vary. Contact your GWM dealer for further information.

Black Bull Bar AGP8001100A

Tow Bar Assembly AGP9001100A

Polished Nudge Bar with Bash Plate
AGP8002100A

Carpet Floor Mats GJFJ00002P

Roof Rack CSJP02195X

Cannon Side Step 5150101XPW06A

Black Hard Lid AGP9007200A

*Not all accessories are a carry over to the Cannon PHEV

Visit gwmanz.com/models/ute/cannon/accessories

More aftercare? For you, can do.

Every GWM comes with GWM Care. It begins from the moment you take delivery of your vehicle and continues long into the future. Wherever the road leads, you can rest assured knowing that your GWM will be kept at its best for many years to come.

7 Year Unlimited KM Warranty*

5 Year Roadside Assist

5 Year Capped Price Servicing

8 Year Battery Warranty*

*Terms & conditions apply.

GWM vehicles are available in a range of stunning contemporary colours.

Standard Colour

Premium Colour (+$595)

Premium Colour (+$595)

Premium Colour (+$595)

Premium Colour (+$595)

Premium Colour (+$595)

Premium Colour (+$595)

Colour.

^Only available on Plug-in Hybrid variants
*XSR Only.
%Not available on CC.

❶ Length: 5416mm
❷ Height: 1884mm
❸ Wheelbase: 3230mm
❹ Tray: 1520x1520mm
❺ Width: 1947mm

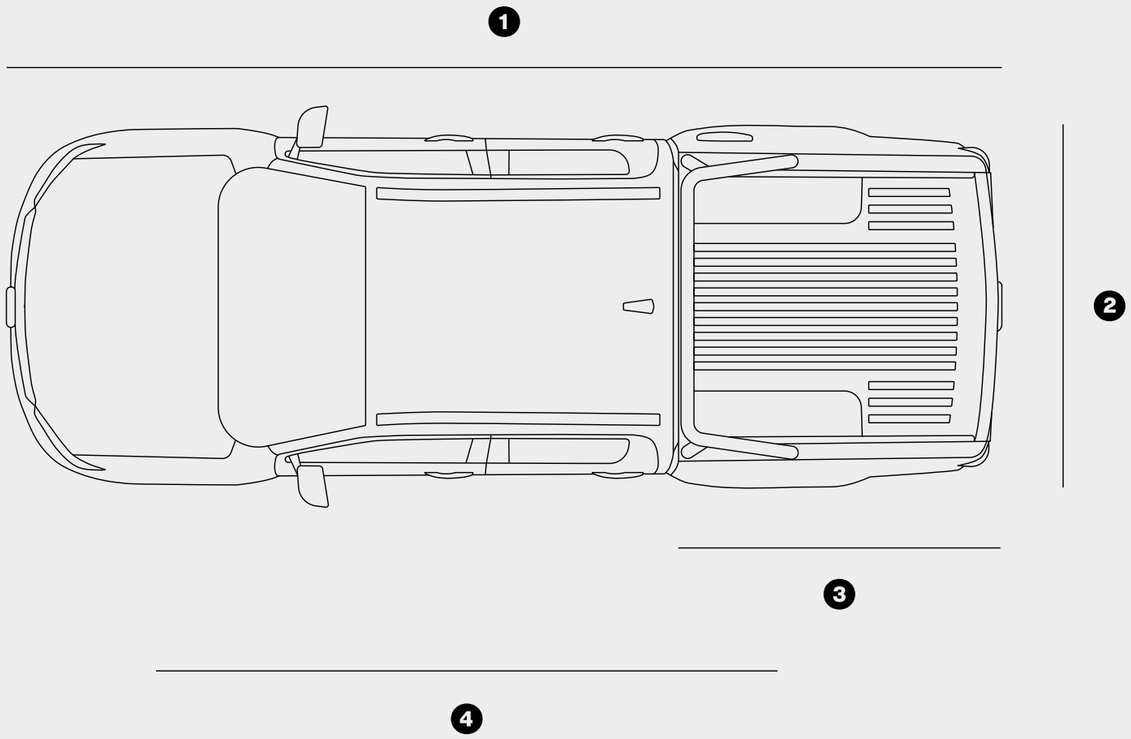

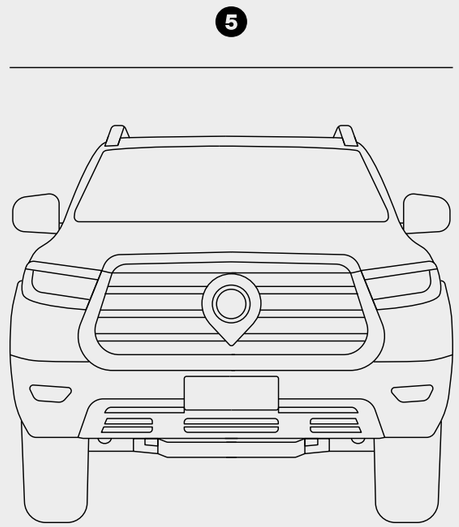

Dimensions.

*Cannon Ultra model shown

		Cannon Premium Single Cab Chasis	Cannon Premium Dual Cab	Cannon Lux Dual Cab	Cannon Lux Dual Cab Chasis	Cannon Ultra/Vanta Dual Cab	Cannon XSR Dual Cab	Cannon Lux Dual Cab PHEV	Cannon Ultra Dual Cab PHEV
		2.0TD 4x2 Auto	2.0TD 4x4 Auto	2.4TD 4x4 Auto	2.4TD 4x4 Auto	2.4TD 4x4 Auto	2.4TD 4x4 Auto	2.0T Hi4-T	2.0T Hi4-T
Dimensions	Length/Width/Height (mm)	5703*1947*1972	5416*1947*1884	5416*1947*1884	5531*2043*1997	5416*1947*1884	5439*1958*1893	5416*1947*1886	5416*1947*1886
	Tray/tub dimension (mm)	2630*1895*250	1520*1520*540	1520*1520*540	1730*1895*250	1520*1520*540	1520*1520*540	1520x1520x517.5	1520x1520x517.5
	Wheelbase (mm)	3470	3230	3230	3230	3230	3230	3230	3230
	Min. ground clearance (mm)	212	232	232	212	232	228	200	200
	Approach angle	27	27	27	27	27	30	26	26
	Breakover angle	21	21	21	21	19	19	19	19
	Departure angle	25	25	25	25	25	26	23	23
	Wading depth (mm)	500	500	500	500	500	700	700	700
	Turning circle – kerb to kerb (m)	13.9	13.1	13.1	13.1	13.1	13.7	13.1	13.1
Engine	Fuel Type	Diesel	Diesel	Diesel	Diesel	Diesel	Diesel	PHEV	PHEV
	Displacement (cm^3)	1996	1996	2370	2370	2370	2370	1998	1998
	Max power (kW@rpm)	120/3600	120/3600	135/3600	135/3600	135/3600	135/3600	Electric motor 130kw, Petrol engine 180@5500-6000, Combined 310kw	Electric motor 130kw, Petrol engine 180@5500-6000, Combined 310kw
	Max torque (Nm@rpm)	400/1400-2600	400/1400-2600	480/1500-2500	480/1500-2500	480/1500-2500	480/1500-2500	Electric motor 495Nm, Petrol engine 380@1700-4000, Combined 750Nm	Electric motor 495Nm, Petrol engine 380@1700-4000, Combined 750Nm
	0-100kmph accelration (seconds)	-	-	-	-	-	-	6.4	6.4
	Compression ratio	16.2 : 1	16.2 : 1	16 : 1	16 : 1	16 : 1	16 : 1	11 : 1	11 : 1
	Fuel economy (L/100km) combined[2]	7.6	8.3	8.4	8.4	8.4	8.4	2.4	2.4
	Fuel economy (L/100km) Urban[2]	8.8	9.8	10.1	10.1	10.1	9.9	-	-
	Fuel economy (L/100km) Extra Urban[2]	6.9	7.4	7.5	7.5	7.5	7.5	-	-
	Co2 emissions (g/km) combined[2]	199g/km	218g/km	221g/km	221g/km	221g/km	221g/km	55g/km	55g/km
	Emission standard	Euro 5	Euro 5	Euro 5	Euro 5	Euro 5	Euro 5	Euro 5	-Euro 5
	850W Electric radiator fan	●	●	●	●	●		●	●
	Viscous radiator fan						●	-	-
	Engine cover	●	●	●	●	●	●	●	●
	Bonnet insulation	●	●	●	●	●	●	●	●
	DPF manual burn button	●	●	●	●	●	●	-	-
	NEDC EV range (km)	-	-	-	-	-	-	115km	115km
	Wh/km	-	-	-	-	-	-	288	288
	NEDC Combined Range (km)	-	-	-	-	-	-	1037	1037
	Low charge fuel economy (L/100km) (combined)	-	-	-	-	-	-	7.9	7.9
	Battery Type	-	-	-	-	-	-	Lithium Ion Phosphate	Lithium Ion Phosphate
	Battery Capacity (kWh)	-	-	-	-	-	-	33.1	33.1
	DC Charging peak 110kW (minutes)	-	-	-	-	-	-	30%-80% 18 minutes	30%-80% 18 minutes
	AC Charging (hour)	-	-	-	-	-	-	15%-100% 5.7 hours	15%-100% 5.7 hours
	V2L Capability	-	-	-	-	-	-	6kW	6kW
	Charge connection type	-	-	-	-	-	-	CCS2	CCS2
	Scheduled Charging	-	-	-	-	-	-	Yes	Yes
	Battery pre-heating	-	-	-	-	-	-	Yes	Yes

Specifications.

		Cannon Premium Single Cab Chasis	Cannon Premium Dual Cab	Cannon Lux Dual Cab	Cannon Lux Dual Cab Chasis	Cannon Ultra/Vanta Dual Cab	Cannon XSR Dual Cab	Cannon Lux Dual Cab PHEV	Cannon Ultra Dual Cab PHEV
Transmission	Transmission	8AT	8AT	9AT	9AT	9AT	9AT	9HAT	9HAT
	Drivetrain	4x2	4x4	4x4	4x4	4x4	4x4	4x4	4x4
	Gear ratios	1st 5.000 2nd 3.200 3rd 2.143 4th 1.720 5th 1.314 6th 1.000 7th 0.822 8th 0.640 Reverse 3.456	1st 5.000 2nd 3.200 3rd 2.143 4th 1.720 5th 1.314 6th 1.000 7th 0.822 8th 0.640 Reverse 3.456	1st 5.288 2nd 3.243 3rd 2.252 4th 1.636 5th 1.211 6th 1.000 7th 0.867 8th 0.717 9th 0.598 Reverse 4.648	1st 5.288 2nd 3.243 3rd 2.252 4th 1.636 5th 1.211 6th 1.000 7th 0.867 8th 0.717 9th 0.598 Reverse 4.648	1st 5.288 2nd 3.243 3rd 2.252 4th 1.636 5th 1.211 6th 1.000 7th 0.867 8th 0.717 9th 0.598 Reverse 4.648	1st 5.288 2nd 3.243 3rd 2.252 4th 1.636 5th 1.211 6th 1.000 7th 0.867 8th 0.717 9th 0.598 Reverse 4.648	1st 5.288 2nd 3.243 3rd 2.252 4th 1.636 5th 1.211 6th 1.000 7th 0.867 8th 0.717 9th 0.598 Reverse 4.648	1st 5.288 2nd 3.243 3rd 2.252 4th 1.636 5th 1.211 6th 1.000 7th 0.867 8th 0.717 9th 0.598 Reverse 4.648
Weights and Capacities	Braked towing capacity	3200	3200	3500	3500	3500	3500	3500	3500
	Unbraked towing capacity	750	750	750	750	750	750	750	750
	Kerb weight[1] (kg)	1900	2140	2230	2230	2230	2330	2585	2585
	Front axle load[1] (kg)	1165	1245	1295	1245	1295	1345	1305	1305
	Rear axle load[1] (kg)	735	895	935	895	935	985	1280	1280
	Max front axle load (kg)	1500	1500	1500	1500	1500	1585	1500	1500
	Max rear axle load (kg)	1915	1915	1950	1915	1950	1850	2005	2005
	Max downball weight (kg)	320	320	350	350	350	350	350	350
	Payload[1] (kg)	1150	995	995	995	995	875	835	835
	Gross Vehicle Mass (kg)	3050	3135	3225	3225	3225	3205	3420	3420
	Gross Combined Mass (kg)	5590	5830	6200	6200	6200	6300	6400	6400
	Tare weight (kg)	1843	2083	2173	2173	2173	2273	2525	2530
	Seating capacity	2	5	5	5	5	5	5	5
	Wading depth (mm)	500	500	500	500	500	700	700	700
	Fuel tank capacity (L)	78L	78L	78L	78L	78L	78L	75L	75L
Suspension	Front suspension	Front: coil spring double wishbone							
	Rear suspension	Rear: leaf spring live axle							
Brakes	Front and rear	Front & rear: vented disc brakes							
	Electronic park brake with auto hold	●	●	●	●	●	●	●	●
	Red Brake Caliper	-	-	-	-	-	●	-	●
Wheels	Wheel description	18" two tone machined alloy wheel				18" black alloy wheel design[1]			
	Wheel spec	18x8J	18x8J	18x8J	18x8J	18x8J	18x8J	18x8J	18x8J
	Tyre spec	265/60 R18 HT	265/60 R18 HT	265/60 R18 HT	265/60 R18 HT	265/60 R18 HT	265/60 R18 AT	265/60 R18 HT	265/60 R18 HT
	Spare wheel	Steel 265/60 R18	Steel 265/60 R18	Steel 265/60 R18	Steel 265/60 R18	Steel 265/60 R18	Steel 265/60 R18	Steel 255/65 R18	Steel 255/65 R18
Chassis and Steering	Electric power steering	●	●	●	●	●	●	●	●
	4 way steering wheel adjustment	●	●	●	●	●	●	●	●
	Steering Mode Adjustment (Sport/ Comfort/Light)	-	●	●	●	●	●	●	●
	Front Differential Lock (Electric)	-	-	-	-	-	●	-	-
	Rear Differential Lock (Electric)	-	●	●	●	●	●	●	●
	Low range transfer case	-	●	●	●	●	●	●	●
	Torque on demand 4x4	-	●	●	●	●	-	●	●
	Part-time 4x4	-	-	-	-	-	●	-	-
	Driving Modes	Normal, Sport, Eco	Normal, Sport, Eco, 4L				2H, 4H, 4L, Snow, Mud, Sand	2H, 4H, 4L, Sport, Snow, Mud,Sand + Towing Driving Mode	2H, 4H, 4L, Sport, Snow, Mud,Sand + Towing Driving Mode
	All Terrain response	-	-	-	-	-	●	-	-
	Expert mode	-	-	-	-	-	●	●	●

		Cannon Premium Single Cab Chasis	Cannon Premium Dual Cab	Cannon Lux Dual Cab	Cannon Lux Dual Cab Chasis	Cannon Ultra/Vanta Dual Cab	Cannon XSR Dual Cab	Cannon Lux Dual Cab PHEV	Cannon Ultra Dual Cab PHEV
Exterior	Sports bar chrome	-	●	●	-	Ultra	-	-	-
	Sports bar black	-	-	-	-	Vanta	●	●	●
	Side step - fixed	●	●	●	●	Ultra	-	-	-
	Black side step - fixed	-	-	-	-	Vanta	-	●	●
	Metal side step - fixed	-	-	-	-	-	●	-	-
	Front grille - machine grey	●	●	●	●	Ultra	-	-	-
	Front grille - matte black	-	-	-	-	Vanta	-	●	●
	Front gille - XSR	-	-	-	-	-	●	-	-
	Snorkel	-	-	-	-	-	●	-	-
	Wheel Arch - body colour	●	●	●	●	Ultra	-	-	-
	Wheel Arch - matt black	-	-	-	-	Vanta	●	●	●
	Under carriage protection	●	●	●	●	●	●	●	●
	Body coloured mirror covers	●	●	●	●	Ultra	●	-	-
	Matte black mirror covers	-	-	-	-	Vanta	-	●	●
	Door Handle: Body colour	●	●	●	●	Ultra	●	-	-
	Door Handle: Matt black	-	-	-	-	Vanta	-	●	●
	Automatic Windscreen Wipers	●	●	●	●	●	●	●	●
	Roof Rails	●	●	●	●	●	●	●	●
	Sunroof	-	-	-	-	●	●	-	●
	Shark fin antenna	-	●	●	●	●	●	●	●
	220V Power Outlet (x3) in the Tub	-	-	-	-	-	-	●	●
	Spray on tub liner	-	●	●	-	●	●	●	●
	Tailgate step	-	-	-	-	●	●	-	-
	Tailgate dampener	-	●	●	-	●	●	●	●
	Tailgate central locking	-	●	●	-	●	●	●	●
	One piece tailgate	-	●	●	-	●	●	●	●
	Standard alloy tray	●	-	-	●	-	-	-	-
Interior	Sunglasses holder	-	●	●	●	●	●	●	●
	Standard steering wheel	●	-	-	-	-	-	-	-
	Faux leather steering wheel	-	●	●	●	●	●	●	●
	Heated steering wheel	-	-	-	-	●	●	-	●
	Paddle shifter	●	●	●	●	●	●	●	●
	Multi-function steering wheel	●	●	●	●	●	●	●	●
	Auto window + anti pinch (Driver)	●	●	●	●	-	-	●	-
	Auto window + anti pinch (All)	-	-	-	-	●	●	-	●
	12V accessories buttons	3	3	3	3	3	3	●	●
	Wireless Charger - Front	-	●	●	●	●	●	●	●
	Standard style seats	●	●	●	●	●	●	●	●
	Drive mode memory	●	●	●	●	●	●	●	●
	A pillar grab handles	-	●	●	●	●	●	●	●
	Front row seat belt warning	●	●	●	●	●	●	●	●
	Second row seat belt warning	-	●	●	●	●	●	●	●
	Emergency fuel cut off	●	●	●	●	●	●	●	●
	Emergency Driving Record	●	●	●	●	●	●	●	●
	Adjustable over speed alert - KM	●	●	●	●	●	●	●	●
	Remote central locking	●	●	●	●	●	●	●	●
	Crash auto unlock	●	●	●	●	●	●	●	●
	Trip computer	●	●	●	●	●	●	●	●

		Cannon Premium Single Cab Chasis	Cannon Premium Dual Cab	Cannon Lux Dual Cab	Cannon Lux Dual Cab Chasis	Cannon Ultra/Vanta Dual Cab	Cannon XSR Dual Cab	Cannon Lux Dual Cab PHEV	Cannon Ultra Dual Cab PHEV
Seats	Comfort Tek leather seats	●	●	●	●	-	-	●	-
	Leather accented seat	-	-	-	-	●	●	-	●
	Front Seats: heated + ventilated	-	-	-	-	●	●	-	●
	Driver 6-way power adjustable seat & front passenger 4-way power adjustable seat	-	-	-	-	●	●	-	●
	Driver 6-way man. adjustable seat & front passenger 4-way man. adjustable seat	●	●	●	●	-	-	●	-
	2nd row folding seats: 60:40	-	●	●	●	●	●	●	●
	2nd row seats: center armrest	-	●	●	●	●	●	●	●
	Front Seat: Manual 2-way adjustable head rest	●	●	●	●	●	●	●	●
Entertainment	7" digital instrument cluster	●	●	●	●	●	●	-	-
	10.25 digital instrument cluster	-	-	-	-	-	-	●	●
	Digital Radio (DAB+)	-	●	●	●	●	●	●	●
	Bluetooth®	●	●	●	●	●	●	●	●
	12.3" full colour touch screen infotainment system	●	●	●	●	●	●	-	-
	15.6" full colour touch screen infotainment system (Coffee OS)	-	-	-	-	-	-	●	●
	Front USB A	●	-	-	-	-	-	-	-
	Front USB A & C, rear USB A x2	-	-	-	-	-	-	●	●
	Front & rear USB A & C	-	●	●	●	●	●	-	-
	USB Port for Dash camera	-	-	-	●	●	●	●	●
	4 speakers	●	-	-	-	-	-	-	-
	6 speakers	-	●	●	●	●	●	●	●
	Wireless Apple CarPlay® + Wireless Android Auto™	●	●	●	●	●	●	●	●
	Adaptive volume control	-	●	●	●	●	●	●	●
	Voice command	●	●	●	●	●	●	●	●
Security	Smart entry (front)	●	●	●	●	●	●	●	●
	Push button start	●	●	●	●	●	●	●	●
	Remote engine start	-	●	●	●	●	●	●	●
	Speed Sensing Central Locking (15KM/H)	●	●	●	●	●	●	●	●
	hide Clear glass	-	-	-	-	-	-	●	●
	hide Privacy glass	-	-	-	-	-	-	-	●
	Rear Windscreen - privacy glass	-	-	-	-	●	●	-	●
	Rear Windscreen - clear glass	-	-	-	-	-	-	●	-
	Rear Privacy Glass	-	-	-	-	●	●	-	●
	Man. fold + Power adjust mirrors with indicator	●	-	-	-	-	-	-	-
	Auto fold + Power adjust mirrors with indicator	-	●	●	●	●	●	●	●
	Sunvisor	●	-	-	-	-	-	●	-
	Sunvisor with illuminated vanity mirror	-	●	●	●	●	●	●	●
	Manual-dimming rear view mirror	●	●	●	●	-	-	●	-
	Auto-dimming rear view mirror	-	-	-	-	●	●	-	●
	Rear demister	-	●	●	●	●	●	●	●

		Cannon Premium Single Cab Chasis	Cannon Premium Dual Cab	Cannon Lux Dual Cab	Cannon Lux Dual Cab Chasis	Cannon Ultra/Vanta Dual Cab	Cannon XSR Dual Cab	Cannon Lux Dual Cab PHEV	Cannon Ultra Dual Cab PHEV
Safety	Type Pressure Monitor System (TPMS)	●	●	●	●	●	●	●	●
	Trailer sway mitigation	●	●	●	●	●	●	●	●
	7 airbags: 2x front, 2x side, 2x curtain, 1x center	●	●	●	●	●	●	●	●
	Driver & Front Passenger SRS Airbags	●	●	●	●	●	●	●	●
	Front Side SRS Airbags	●	●	●	●	●	●	●	●
	Curtain SRS Airbags	●	●	●	●	●	●	●	●
	Front Middle SRS Airbag	●	●	●	●	●	●	●	●
	Front Seatbelt Pre-tensioners With Load Limiters	●	●	●	●	●	●	●	●
	ISOFIX Child Restraint Anchorage Points (Outer Rear Seats)	-	●	●	●	●	●	●	●
	Rear door child locks	-	●	●	●	●	●	●	●
	Electronic Stability Control	●	●	●	●	●	●	●	●
	Brake Assist System (BAS)	●	●	●	●	●	●	●	●
	Hill Ascent/Descent Control	●	●	●	●	●	●	●	●
	Vehicle dynamic control system[6]	-	●	●	●	●	●	●	●
	Adaptive Cruise Control (ACC)	●	●	●	●	●	●	●	●
	Auto Emergency Brake (AEB)	●	●	●	●	●	●	●	●
	AEB junction assist	●	●	●	●	●	●	●	●
	Front Collision Warning (FCW) pedestrian + cyclist	●	●	●	●	●	●	●	●
	Lane Departure Warning (LDW)	●	●	●	●	●	●	●	●
	Lane Keeping Assist (LKA)	●	●	●	●	●	●	●	●
	Lane Central Keeping (LCK)	●	●	●	●	●	●	●	●
	Traffic Sign Recognition (TSR)	●	●	●	●	●	●	●	●
	Traffic Jam Assist (TJA)	●	●	●	●	●	●	●	●
	ICA + Intelligent Turning	●	●	●	●	●	●	●	●
	Emergency Lane Keeping (ELK)	●	●	●	●	●	-	●	●
	Smart Dodge	●	●	●	●	●	-	●	●
	Door Open Warning (DOW)	-	●	●	-	●	-	●	●
	Rear Collision Warning (RCW)	-	●	●	-	●	-	●	●
	Blind Spot Monitor (BSM)	-	●	●	-	●	-	●	●
	Lane Change Assist (LCA)	-	●	●	-	●	-	●	●
	Rear Cross Traffic Alert (With Brake)	-	●	●	-	●	-	●	●
	Electric park brake with Auto hold	●	●	●	●	●	●	●	●
	Emergency Signal System (ESS)	●	●	●	●	●	●	●	●
	Driver Fatigue Monitor System (DFMS)	●	●	●	●	●	●	●	●
	360° View Monitor	-	-	-	-	●	●	-	●
	Reversing Camera	●	●	●	●	-	-	●	-
	Front Parking Sensor x2	-	-	-	-	●	-	-	-
	Front Parking Sensor x4	-	-	-	-	●	-	-	●
	Rear Parking Sensor x4	-	-	-	-	-	-	●	●
	Rear Parking Sensor x2	●	●	●	●	●	●	-	-

		Cannon Premium Single Cab Chasis	Cannon Premium Dual Cab	Cannon Lux Dual Cab	Cannon Lux Dual Cab Chasis	Cannon Ultra/Vanta Dual Cab	Cannon XSR Dual Cab	Cannon Lux Dual Cab PHEV	Cannon Ultra Dual Cab PHEV
Lighting	Auto LED Headlights	●	●	●	●	●	●	●	●
	Headlight "Follow me home" function	●	●	●	●	●	●	●	●
	High-mounted brake light	●	●	●	●	●	●	●	●
	LED Taillights	●	●	●	●	●	●	●	●
	Auto low beam	●	●	●	●	●	●	●	●
	Auto high beam	●	●	●	●	●	●	●	●
	Front fog lamp with Steering	●	●	●	●	●	-	●	●
	LED Rear Fog lamp	-	●	●	-	●	●	●	●
	DRL (Daytime Running Light)	●	●	●	●	●	●	●	●
	Electric headlight levelling	●	●	●	●	●	●	●	●
	Ambient lighting	-	-	-	-	●	●	●	●
	Reading lamp	●	●	●	●	●	●	●	●
	Ceiling lamp	-	●	●	●	●	●	●	●
	Front footwell lamp	-	-	-	-	●	●	-	●
	Sequential LED indicators	●	●	●	●	●	●	●	●
Air Conditioning	Climate control aircon	●	●	●	●	●	●	●	●
	N95 grade dust filter	●	●	●	●	●	●	●	●
	Rear A/C outlet - top/under	-	●	●	●	●	●	●	●

[1]Weights/mass/volumes/dimensions are approximate and subject to individual vehicle variances, and should be confirmed before fitting any accessories, towing or otherwise relying on this value

[2]Results achieved in ADR81/02 fuel consumption testing. Results produced in laboratory test conditions, using sample vehicles without fitment of accessories/customisation, and do not reflect real world driving. Figures should only be used for comparative purposes.

[3]Towing capacity subject to regulatory requirements, tow bar and vehicle design and towing equipment limitations.

[4]Android Auto™ is a trademark of Google LLC. Requires compatible device, USB connection, mobile data, network reception and GPS signal. Mobile usage at user's cost. Functionality subject to change.

[5]CarPlay® is a trademark of Apple Inc in the U.S. and other countries. Requires compatible device, USB connection, mobile data, network reception and GPS signal. Mobile usage at user's cost. Functionality subject to change.

[6]Vehicle dynamic control system includes Anti lock Brake System (ABS), Electronic Brake pressure Distribution (EBD), Traction Control System (TCS), Roll-over Mitigation Intervention (RMI), Electronic Stability Control (ESC)

GWM

GO WITH MORE

For more information visit gwmanz.com/au

GWM Australia reserve the right to alter vehicle specifications and equipment levels without notice. Some equipment featured on vehicles in this brochure may not be available or may be optional. To the extent permitted by law, GWM Australia shall not be liable to any person as a result of reliance on the content of the brochure. Always check with your local GWM Dealer for the latest product specifications.

Information in this brochure is current as at 16/10/2026.
Edition Code: GWMA 20261016.
Copyright © GWMA. All rights reserved.